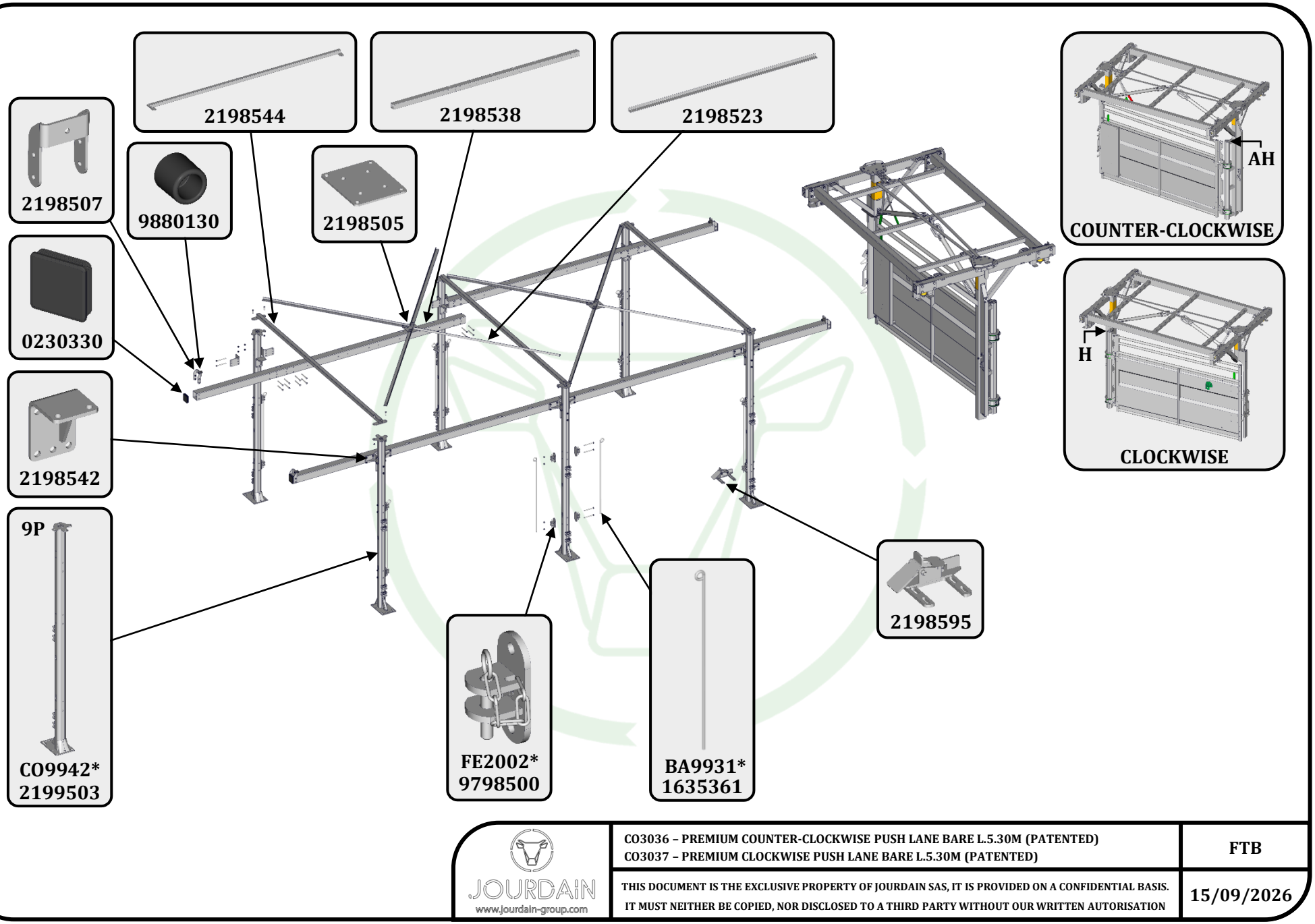

JOURDAIN
www.jourdain-group.com

CO3036 – PREMIUM COUNTER-CLOCKWISE PUSH LANE BARE L.5.30M (PATENTED)
CO3037 – PREMIUM CLOCKWISE PUSH LANE BARE L.5.30M (PATENTED)

FTB

THIS DOCUMENT IS THE EXCLUSIVE PROPERTY OF JOURDAIN SAS, IT IS PROVIDED ON A CONFIDENTIAL BASIS.
IT MUST NEITHER BE COPIED, NOR DISCLOSED TO A THIRD PARTY WITHOUT OUR WRITTEN AUTORISATION

15/09/2026

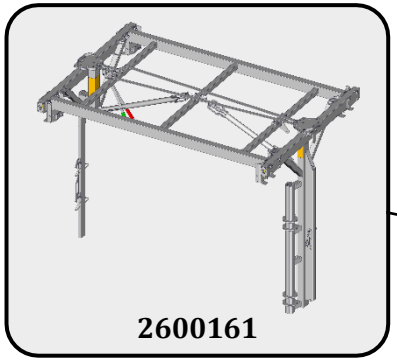

2600161

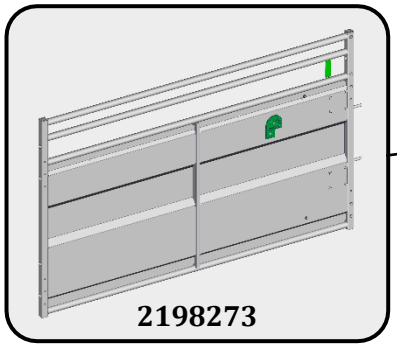

2198273

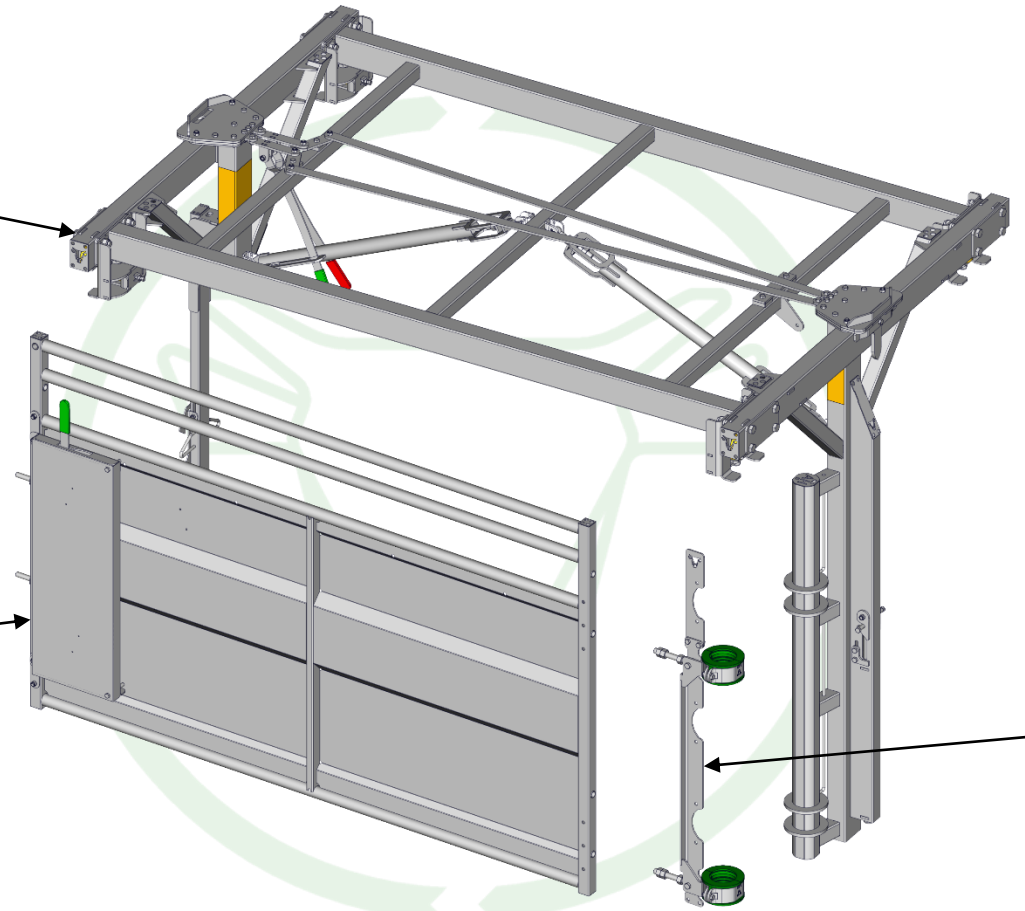

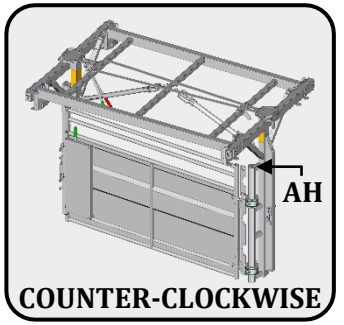

COUNTER-CLOCKWISE

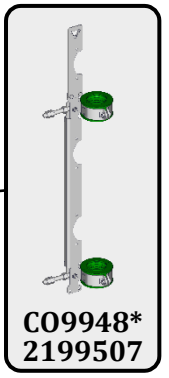

CO9948*
2199507

JOURDAIN www.jourdain-group.com	CO3036 – PREMIUM COUNTER-CLOCKWISE PUSH LANE BARE L.5.30M (PATENTED)	FTB
	THIS DOCUMENT IS THE EXCLUSIVE PROPERTY OF JOURDAIN SAS, IT IS PROVIDED ON A CONFIDENTIAL BASIS. IT MUST NEITHER BE COPIED, NOR DISCLOSED TO A THIRD PARTY WITHOUT OUR WRITTEN AUTORISATION	15/09/2026

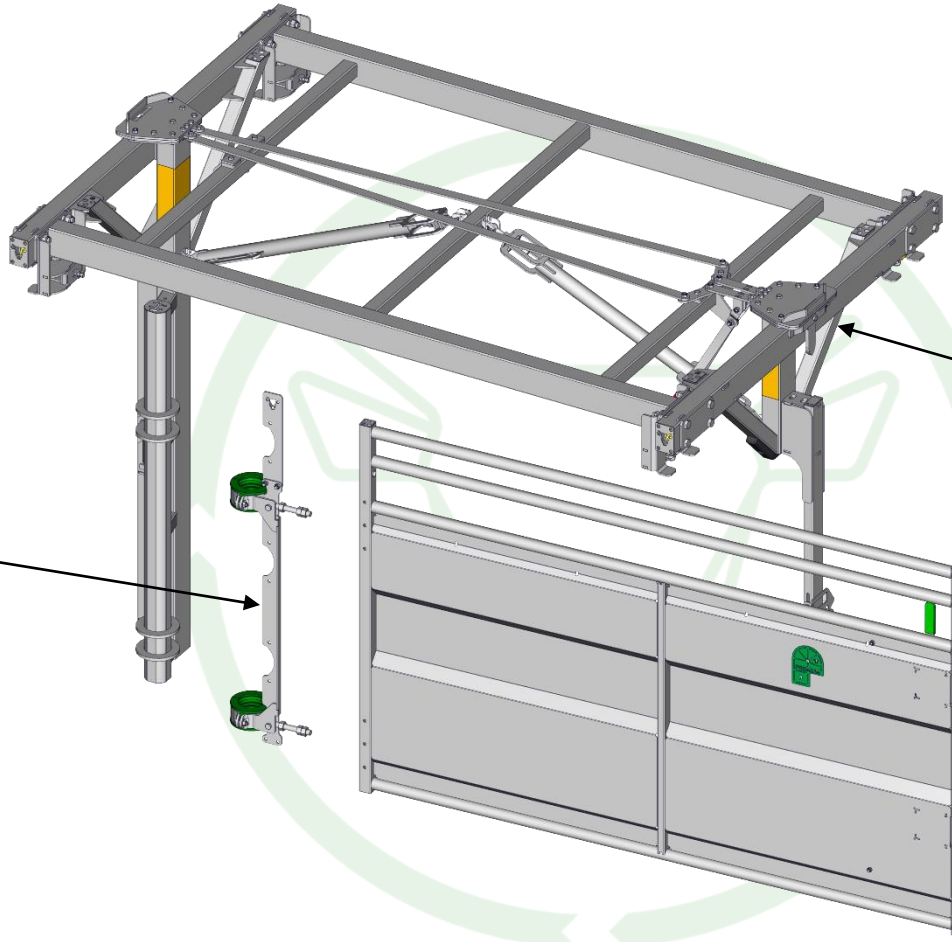

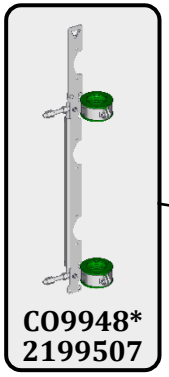

CO9948*
2199507

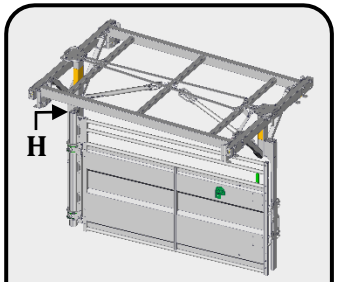

CLOCKWISE



2600163

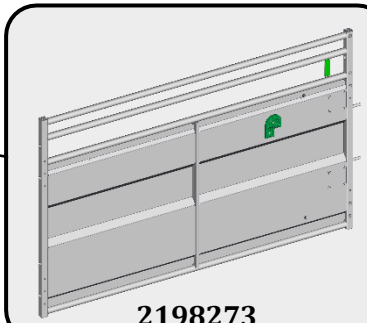

2198273

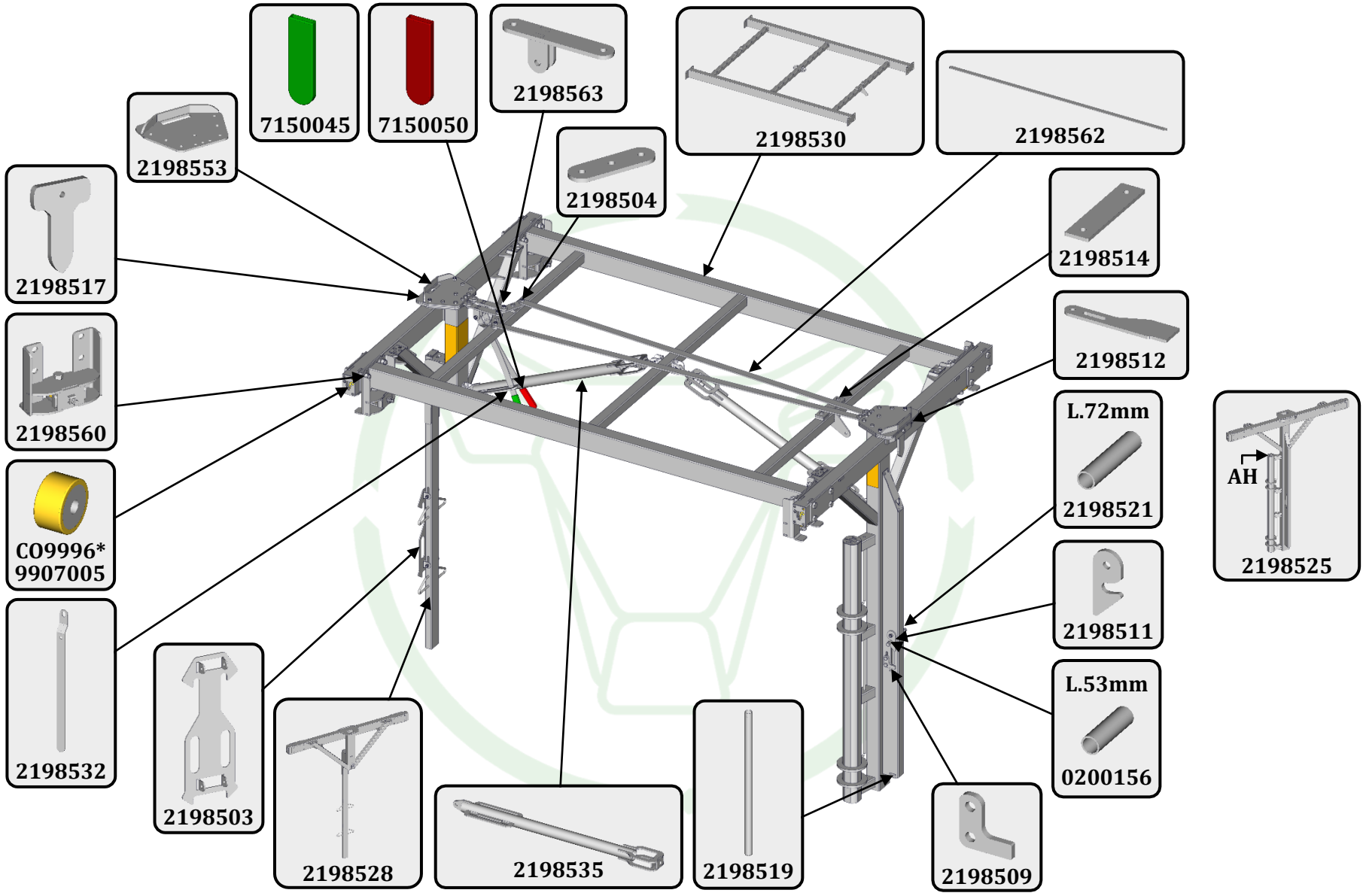

JOURDAIN
www.jourdain-group.com

2600161 – COUNTER-CLOCKWISE CARRIAGE PUSH LANE

FTB

THIS DOCUMENT IS THE EXCLUSIVE PROPERTY OF JOURDAIN SAS, IT IS PROVIDED ON A CONFIDENTIAL BASIS.
IT MUST NEITHER BE COPIED, NOR DISCLOSED TO A THIRD PARTY WITHOUT OUR WRITTEN AUTORISATION

15/09/2026

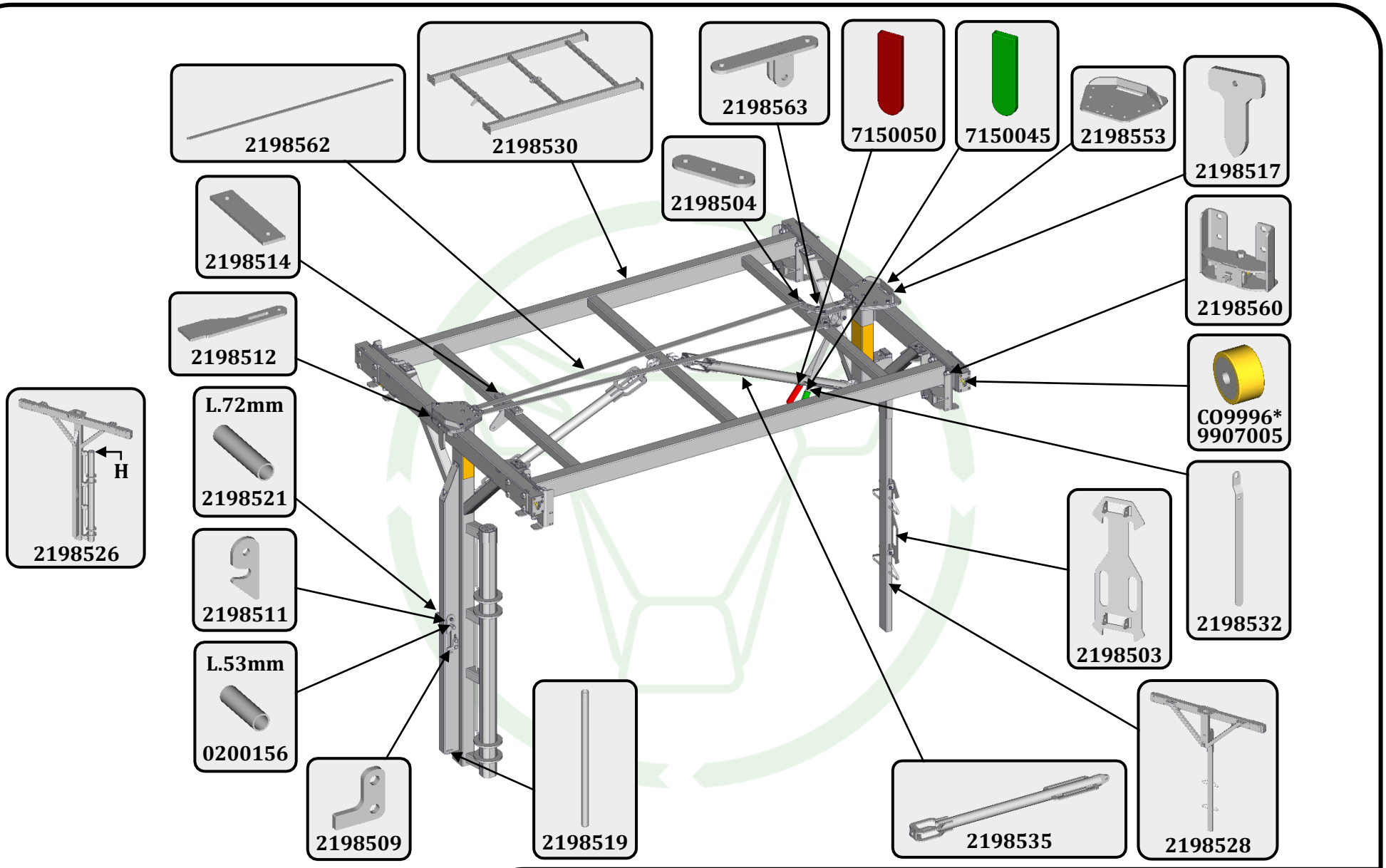

JOURDAIN www.jourdain-group.com	2600163 – CLOCKWISE CARRIAGE PUSH LANE	FTB
	THIS DOCUMENT IS THE EXCLUSIVE PROPERTY OF JOURDAIN SAS, IT IS PROVIDED ON A CONFIDENTIAL BASIS. IT MUST NEITHER BE COPIED, NOR DISCLOSED TO A THIRD PARTY WITHOUT OUR WRITTEN AUTORISATION	15/09/2026

SAC 600*

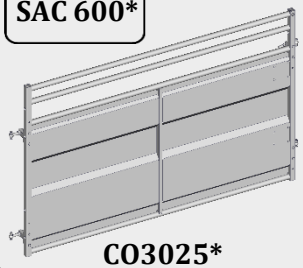

CO3025*

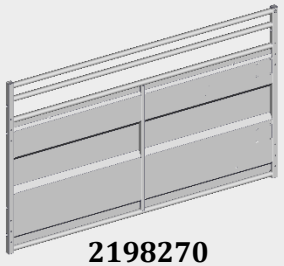

2198270

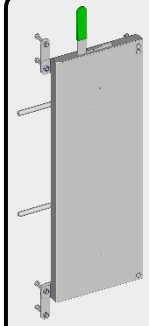

CO9955*
2199530

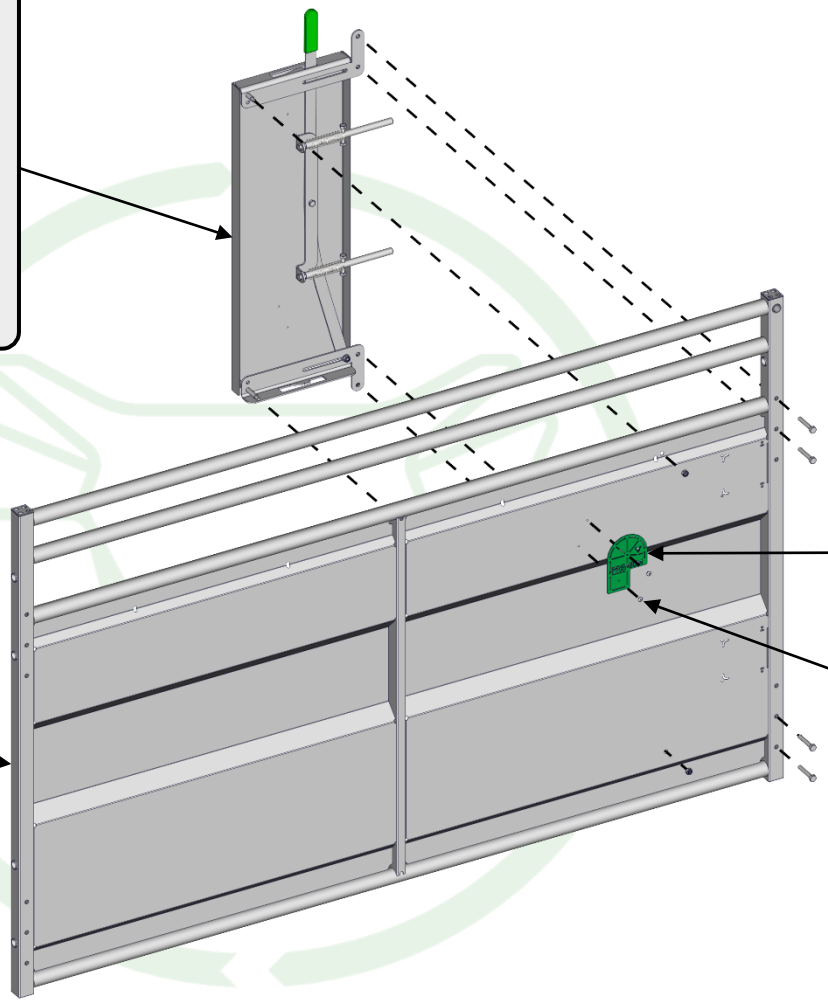



2198295

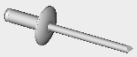

2198297

JOURDAIN www.jourdain-group.com	2198273 – FIXED SHEETED BARRIER L.2.78M CONTENTION PREMIUM LOGO ASSEMBLED	FTB
	THIS DOCUMENT IS THE EXCLUSIVE PROPERTY OF JOURDAIN SAS, IT IS PROVIDED ON A CONFIDENTIAL BASIS. IT MUST NEITHER BE COPIED, NOR DISCLOSED TO A THIRD PARTY WITHOUT OUR WRITTEN AUTORISATION	15/09/2026

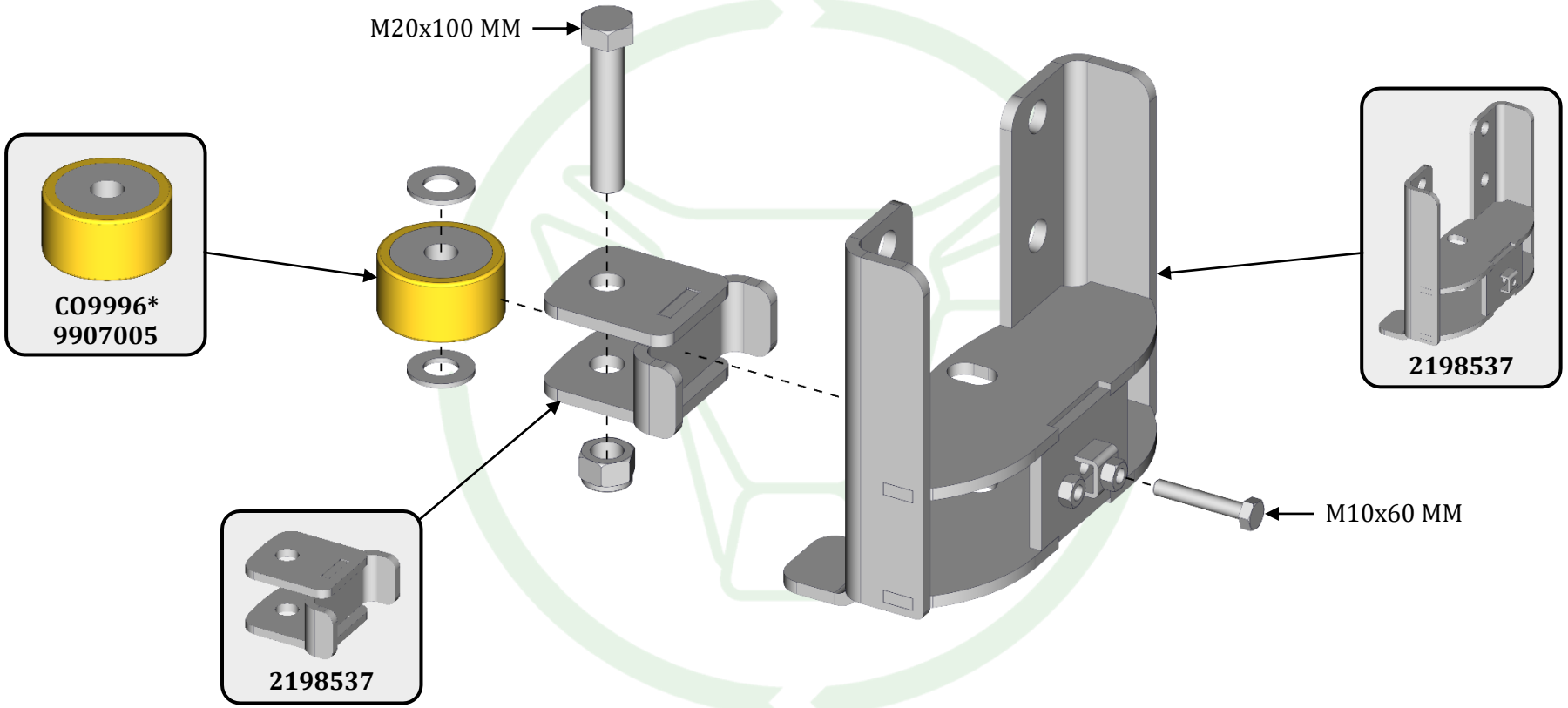

JOURDAIN www.jourdain-group.com	**2198560 – LATERAL GUIDE MOUNTED PUSH LANE**	**FTB**
	THIS DOCUMENT IS THE EXCLUSIVE PROPERTY OF JOURDAIN SAS, IT IS PROVIDED ON A CONFIDENTIAL BASIS. IT MUST NEITHER BE COPIED, NOR DISCLOSED TO A THIRD PARTY WITHOUT OUR WRITTEN AUTORISATION	**15/09/2026**

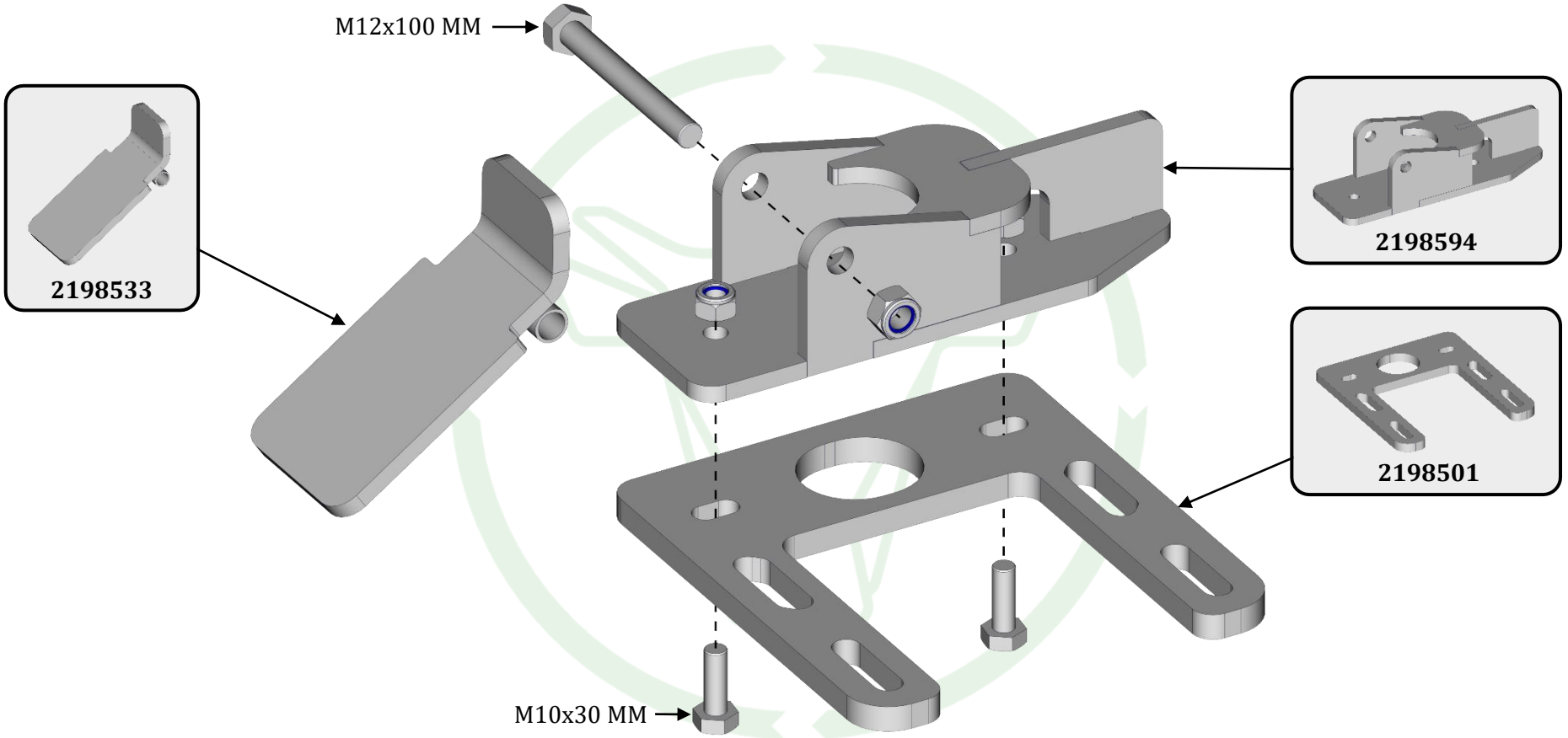

JOURDAIN www.jourdain-group.com	**2198595 – GROUND LOCKING SHOE PUSH LANE ASSEMBLED**	**FTB**
	THIS DOCUMENT IS THE EXCLUSIVE PROPERTY OF JOURDAIN SAS, IT IS PROVIDED ON A CONFIDENTIAL BASIS. IT MUST NEITHER BE COPIED, NOR DISCLOSED TO A THIRD PARTY WITHOUT OUR WRITTEN AUTORISATION	**15/09/2026**