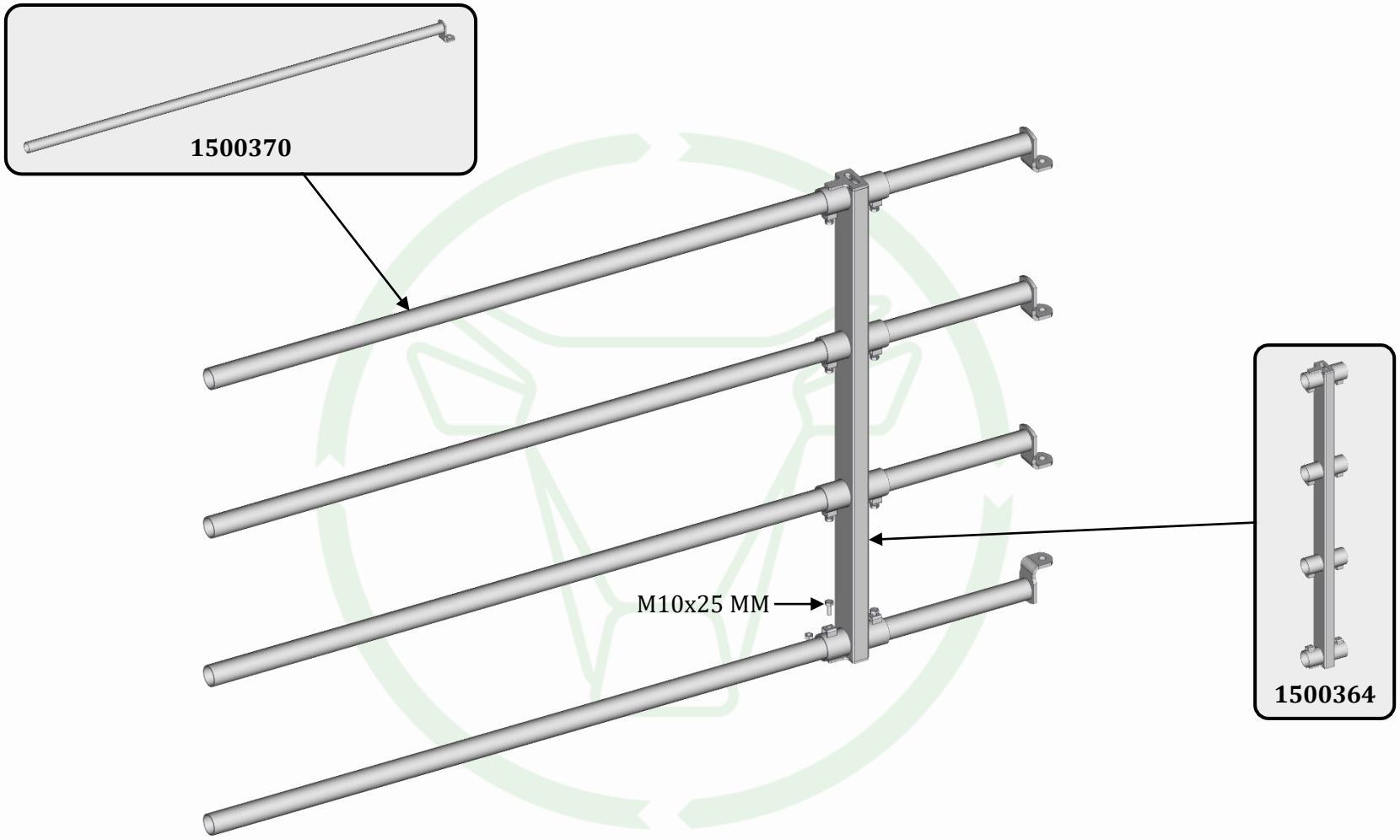

JOURDAIN www.jourdain-group.com	BA5024 – FRONT EX4 NOZZLE PASSAGE DRINKING TROUGH CUT-OUT UNIVERSAL	FTB
	THIS DOCUMENT IS THE EXCLUSIVE PROPERTY OF JOURDAIN SAS, IT IS PROVIDED ON A CONFIDENTIAL BASIS. IT MUST NEITHER BE COPIED, NOR DISCLOSED TO A THIRD PARTY WITHOUT OUR WRITTEN AUTORISATION	13/10/2026