

BA2165*
2080585

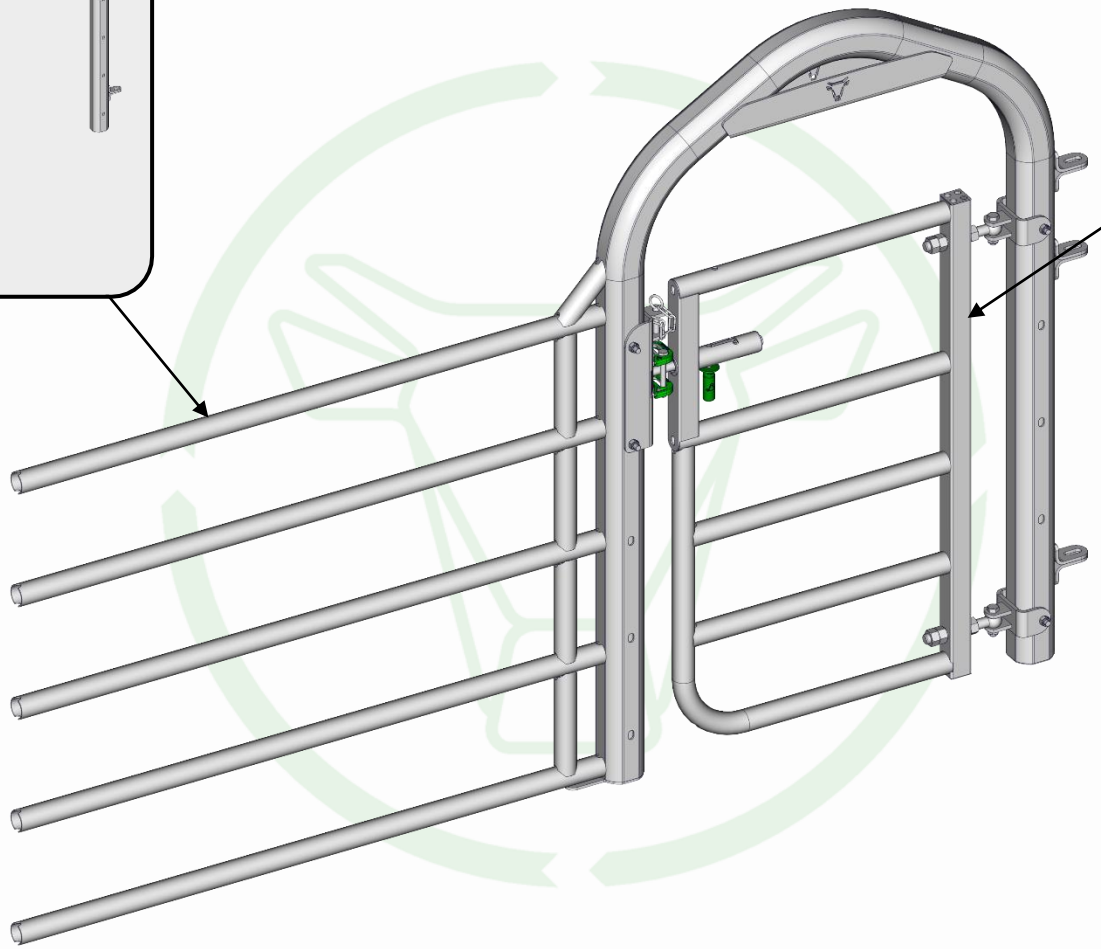

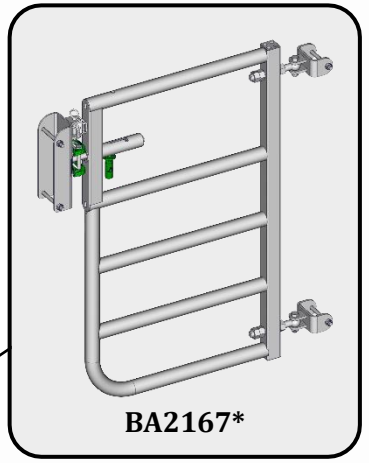

BA2167*

JOURDAIN
www.jourdain-group.com

BA2162 – FRONT EX5 WIDE RIGHT OR LEFT PASSAGE WITH ARCHED GATE | **FTB**

THIS DOCUMENT IS THE EXCLUSIVE PROPERTY OF JOURDAIN SAS, IT IS PROVIDED ON A CONFIDENTIAL BASIS.
IT MUST NEITHER BE COPIED, NOR DISCLOSED TO A THIRD PARTY WITHOUT OUR WRITTEN AUTORISATION

03/06/2026