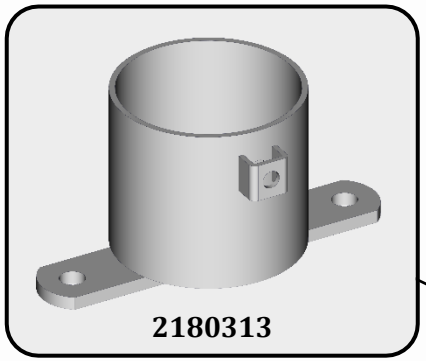

2180313

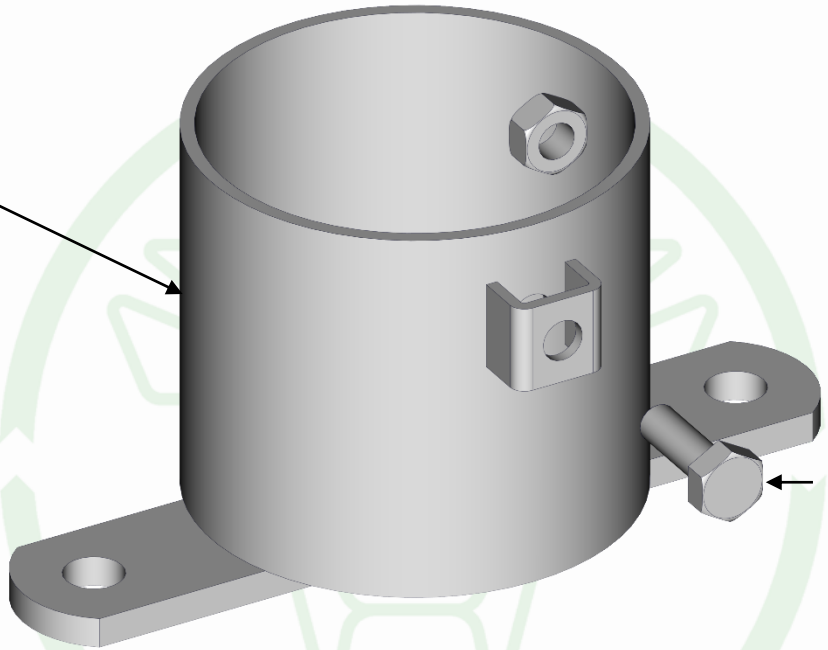

SAC 144*

JOURDAIN www.jourdain-group.com	**FE2093 – SEALING SOCKET FOR POST D.102MM**	**FTB**
	THIS DOCUMENT IS THE EXCLUSIVE PROPERTY OF JOURDAIN SAS, IT IS PROVIDED ON A CONFIDENTIAL BASIS. IT MUST NEITHER BE COPIED, NOR DISCLOSED TO A THIRD PARTY WITHOUT OUR WRITTEN AUTORISATION	**14/10/2026**