

BA2164*
2080584

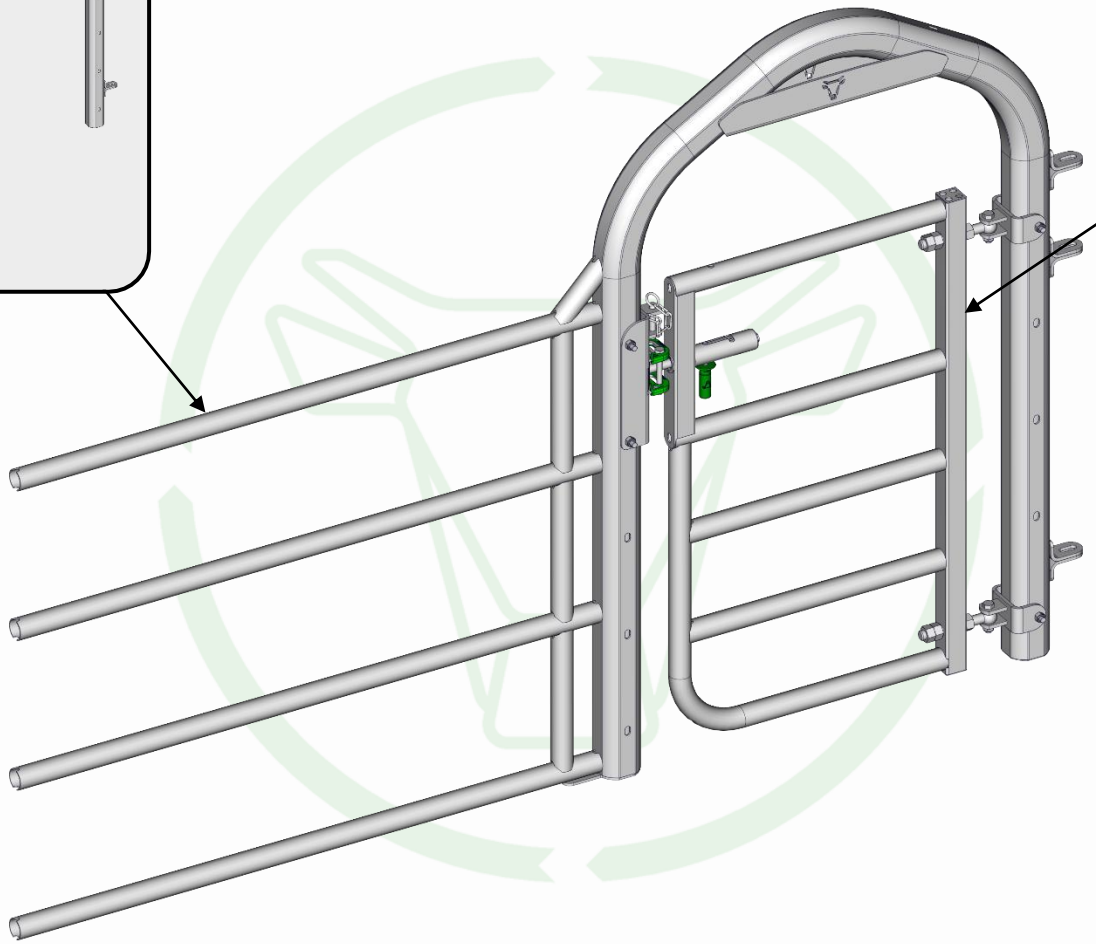

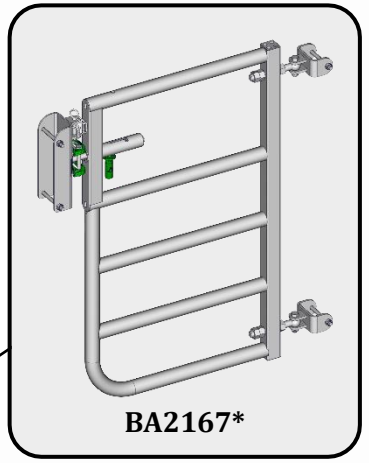

BA2167*

JOURDAIN
www.jourdain-group.com

BA2161 – FRONT EX4 WIDE RIGHT OR LEFT PASSAGE WITH ARCHED GATE

FTB

THIS DOCUMENT IS THE EXCLUSIVE PROPERTY OF JOURDAIN SAS, IT IS PROVIDED ON A CONFIDENTIAL BASIS.
IT MUST NEITHER BE COPIED, NOR DISCLOSED TO A THIRD PARTY WITHOUT OUR WRITTEN AUTORISATION

03/06/2026