JOURDAIN
www.jourdain-group.com

FE3016

FERRURE SURLOCK RALLONGEE ORIENTABLE
EXTENDED SURLOCK FITTING
VERLANGERTER SURLOCK HALTERUNG
SOPORTE SURLOCK EXTENDIDO

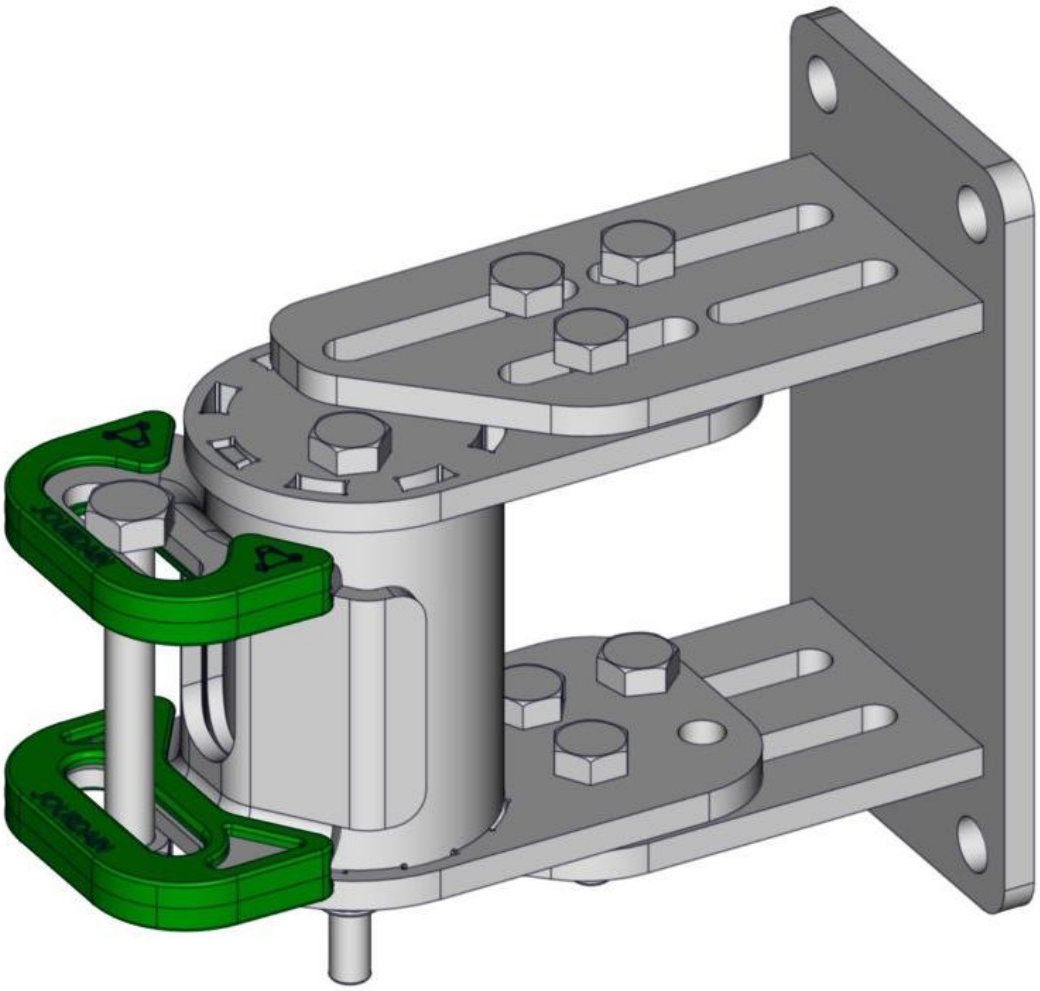

15/07/2025

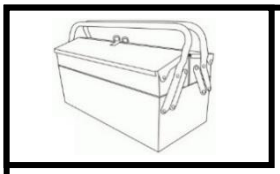

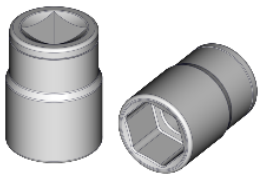

17
19



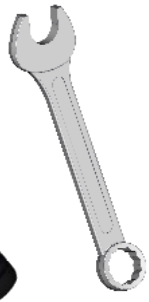

17
19

Montage / Mounting mini

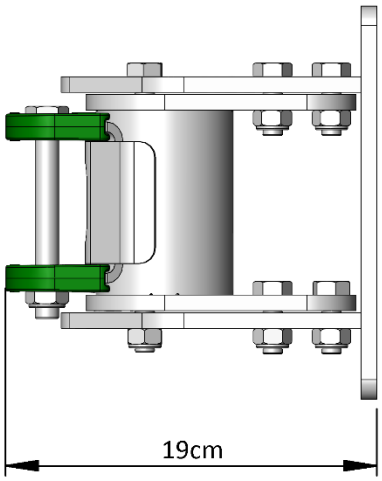

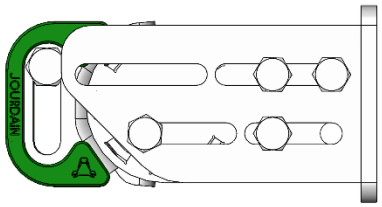

Montage / Mounting maxi

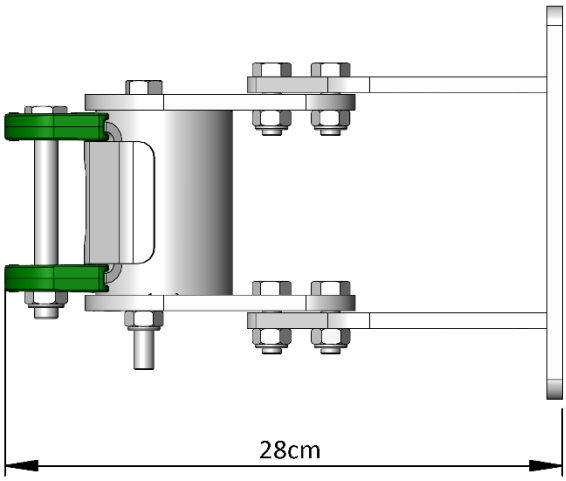

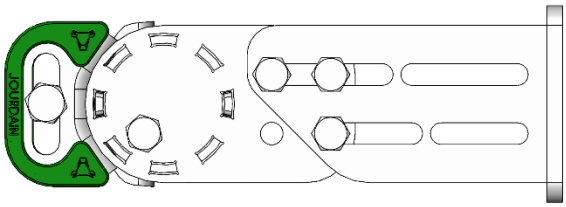

Montage / Mounting 45°

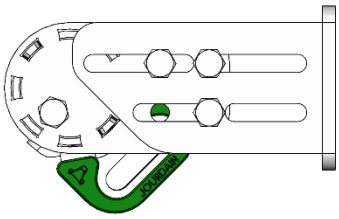

Montage / Mounting 90°

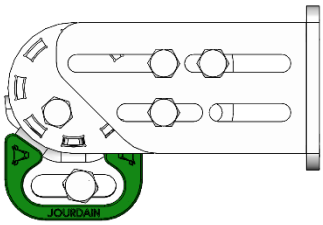

Montage / Mounting 135°

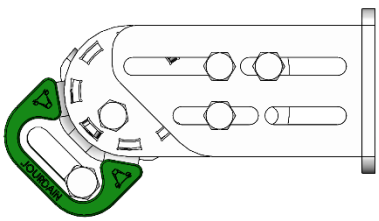

Montage / Mounting 180°

